INSTALLATION GUIDE

Mitsubishi MV Triton

High beam piggyback adaptor

Plug-in high beam trigger connection for an auxiliary driving light wiring harness.

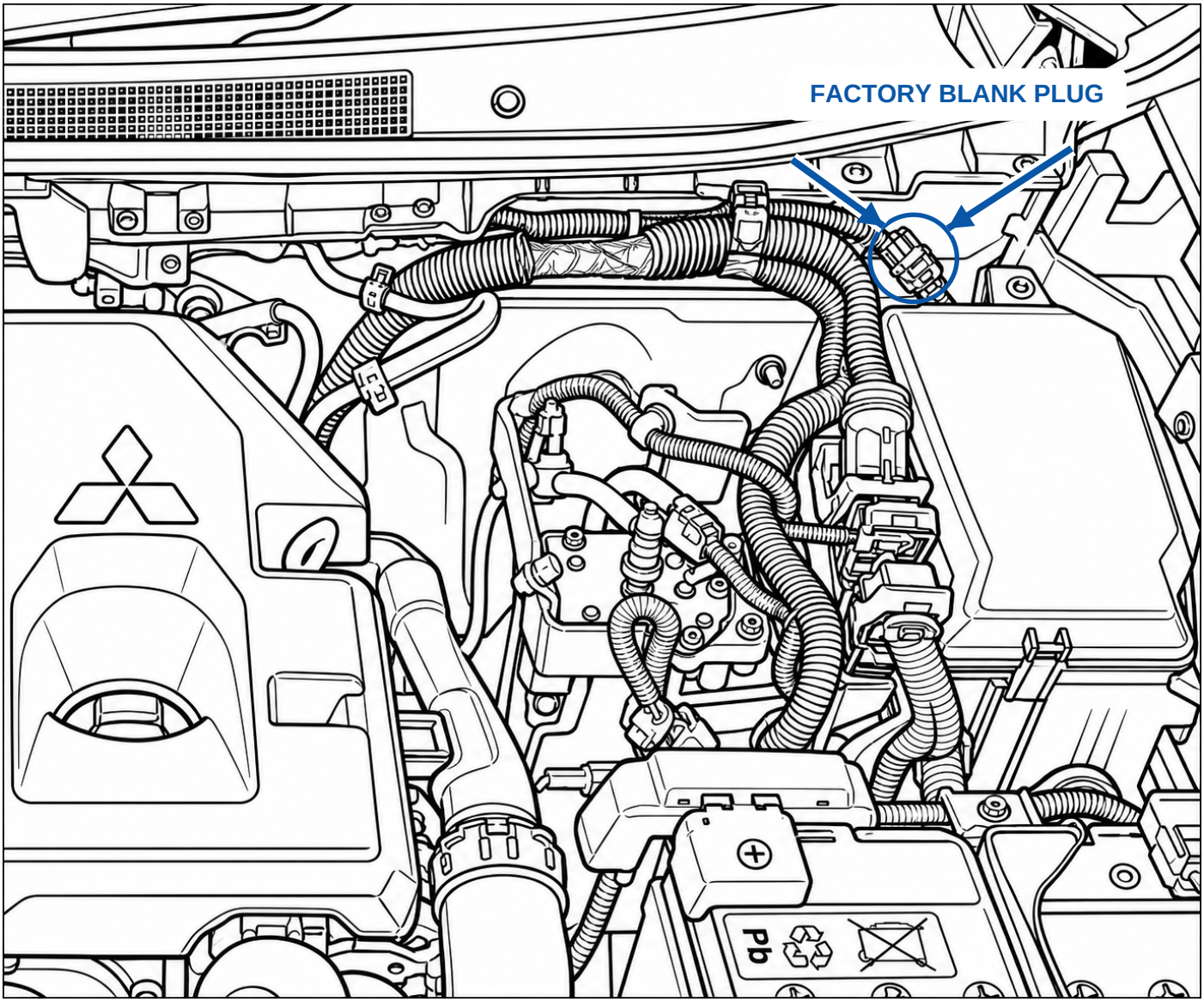

Passenger-side rear of engine bay | Illustration for location reference

1 Locate the factory connector

Switch off the ignition. Find the unused connector near the passenger-side firewall, behind the fuse box, as indicated above.

2 Fit the piggyback adaptor

Release and remove the factory blanking cap. Connect the adaptor to the exposed factory connector, ensuring the locking tab clicks into place. Refit the cap to the unused mating end of the adaptor.

3 Earth and test

Secure the adaptor earth lead to the adjacent chassis bracket using a suitable factory bolt. Connect the trigger lead to your driving light harness, secure loose wiring and check high beam operation.